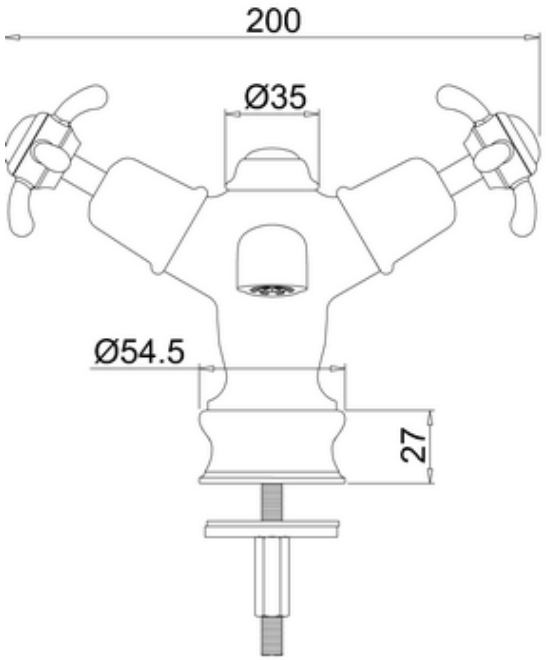
200
Ø35
Ø54.5
27

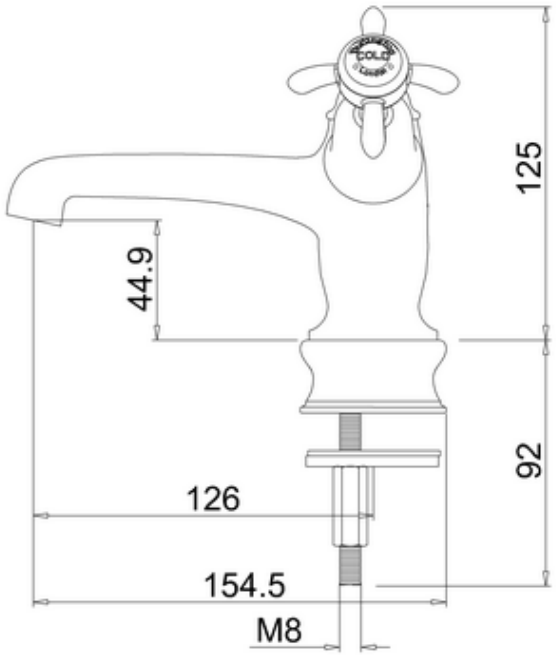
125
44.9
92
126
154.5
M8

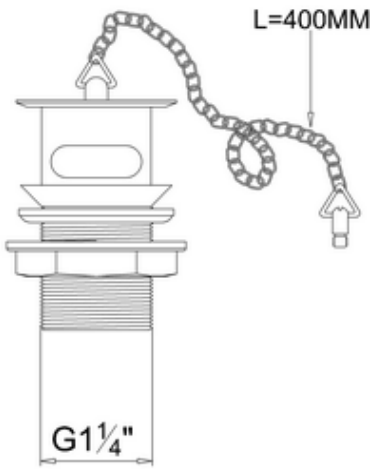
L=400MM
G1¼"