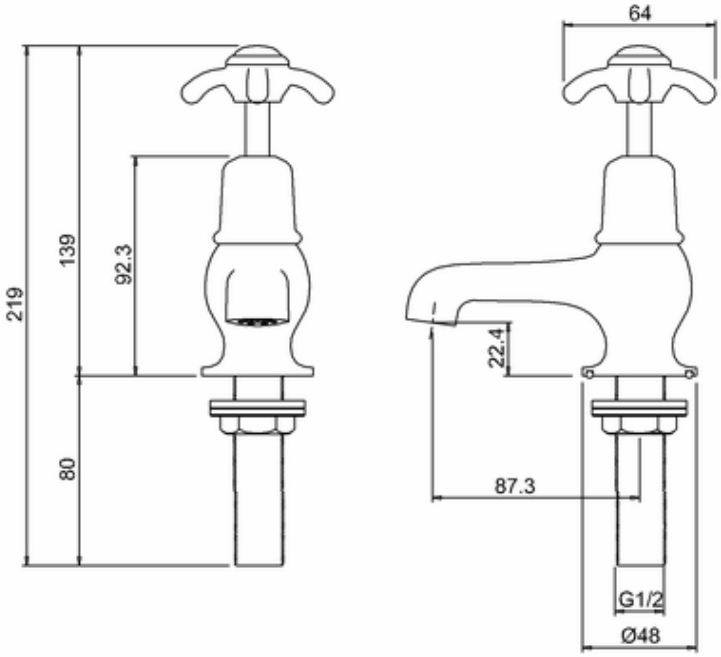
64
219
139
92.3
80
22.4
87.3
G1/2
Ø48