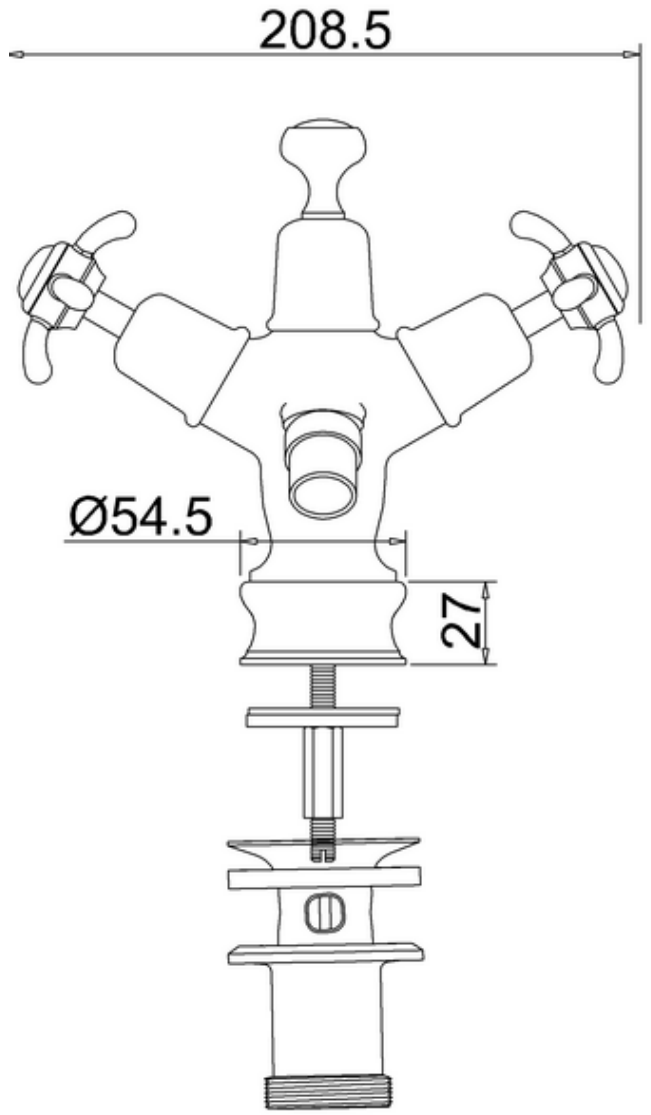
208.5
Ø54.5
27

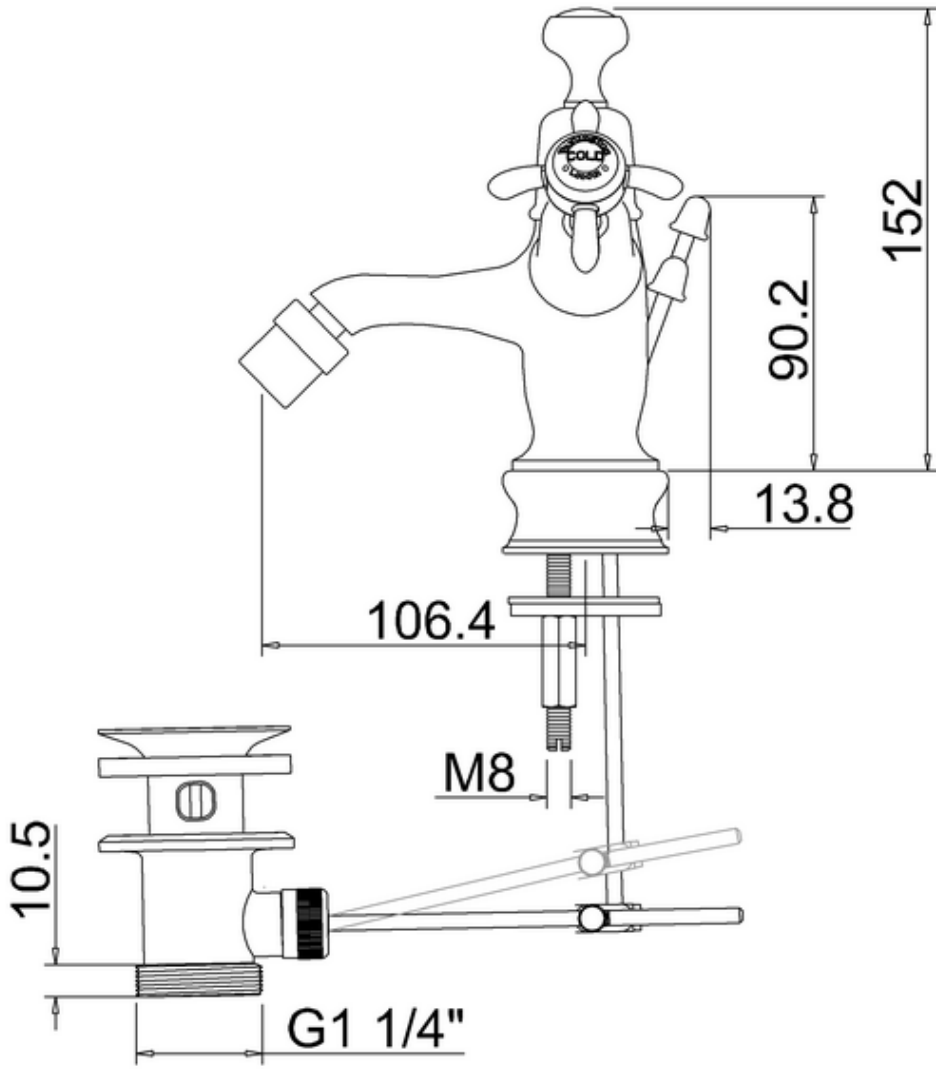
152
90.2
13.8
106.4
M8
10.5
G1 1/4"