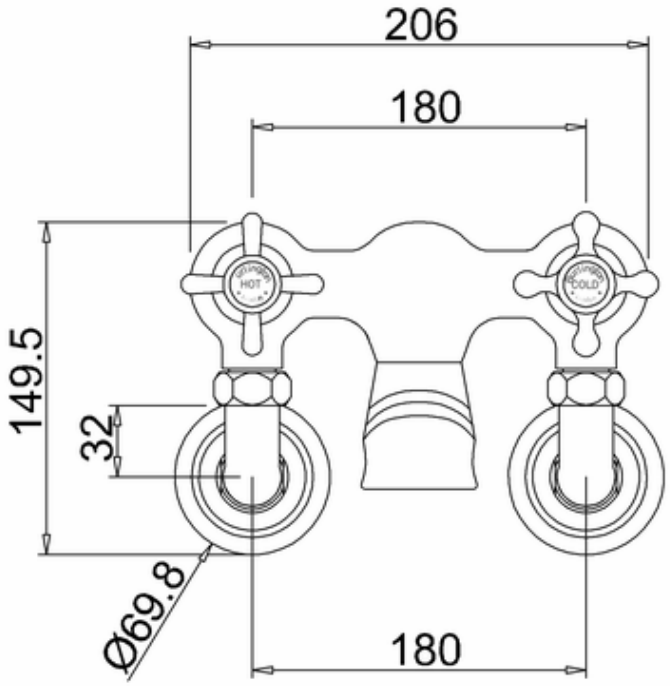
206
180
149.5
32
Ø69.8
180
HOT
COLD

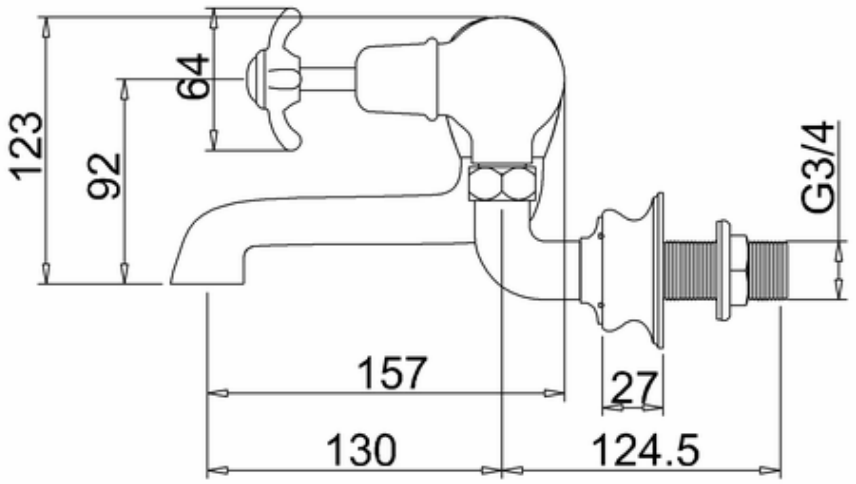
123
64
92
G3/4
157
27
130
124.5