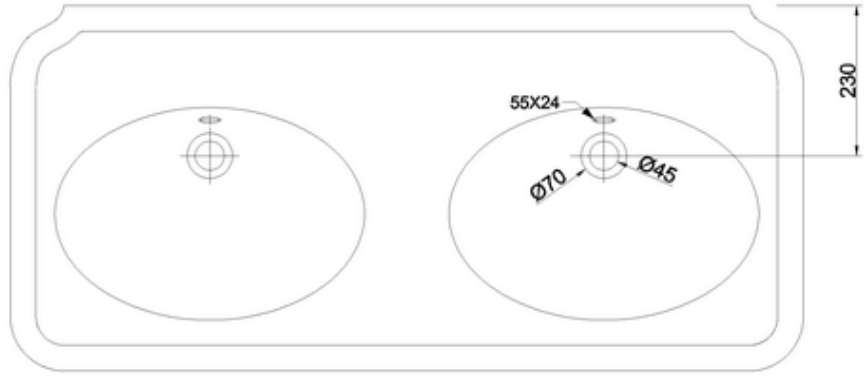

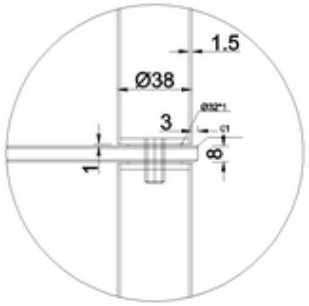

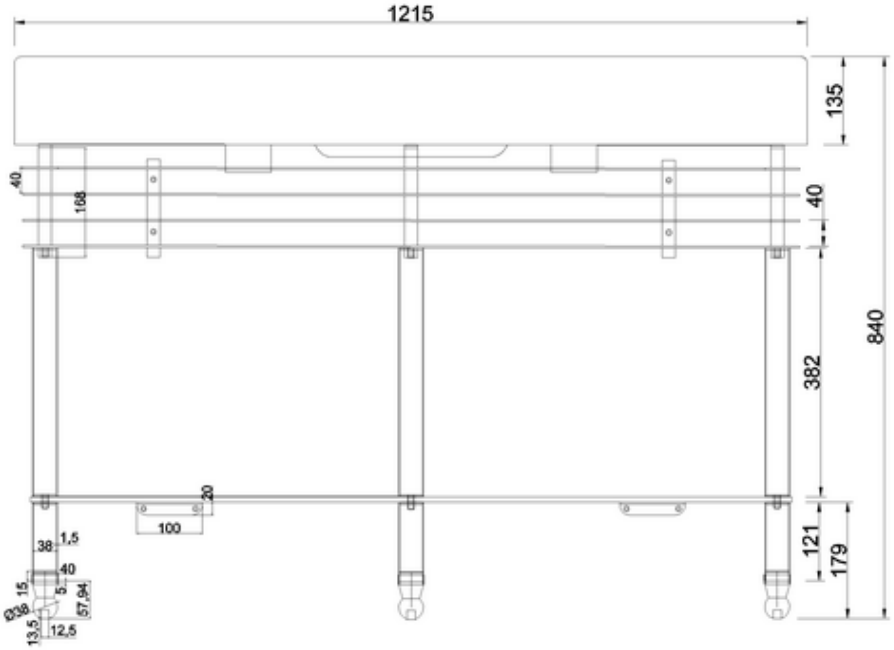

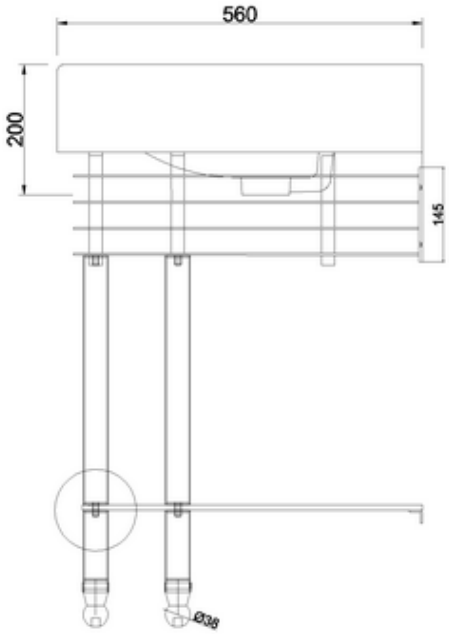

BATHROOMBRANDS®