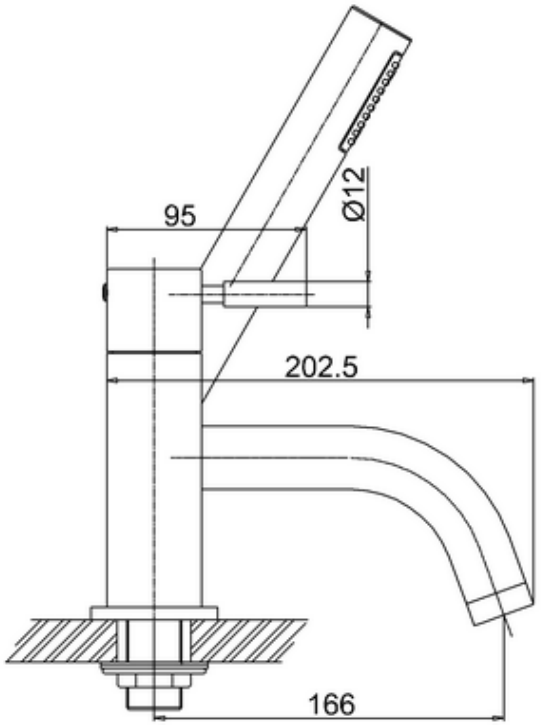
95
Ø12
202.5
166

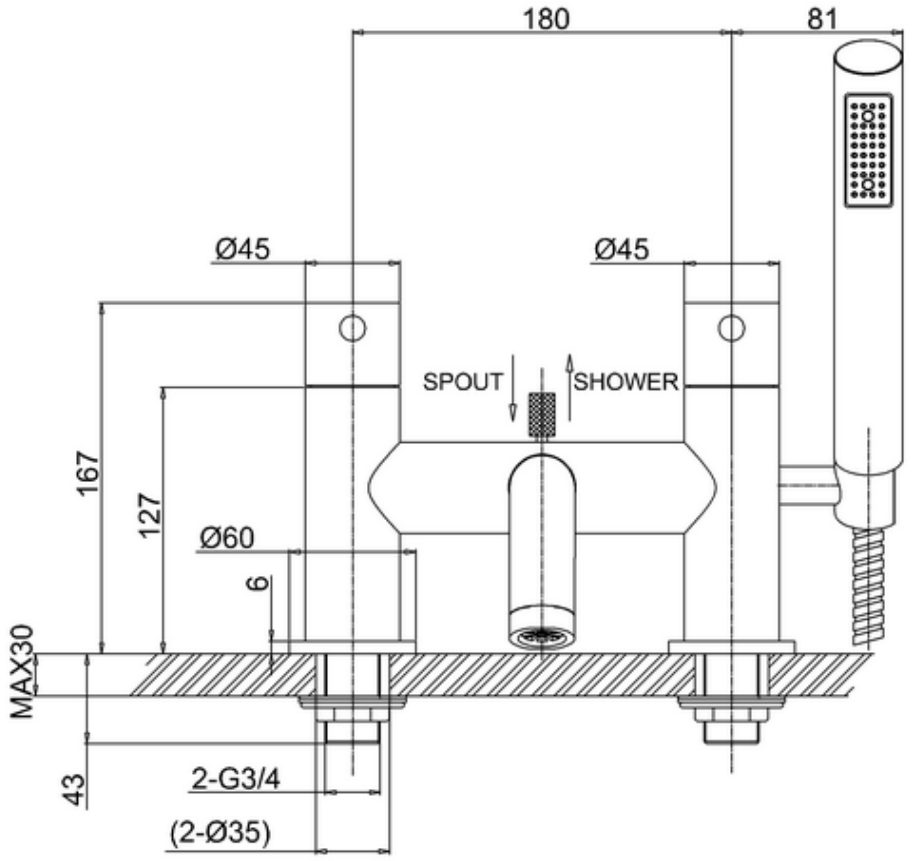
180
81
Ø45
Ø45
SPOUT
SHOWER
167
127
Ø60
6
MAX30
43
2-G3/4
(2-Ø35)