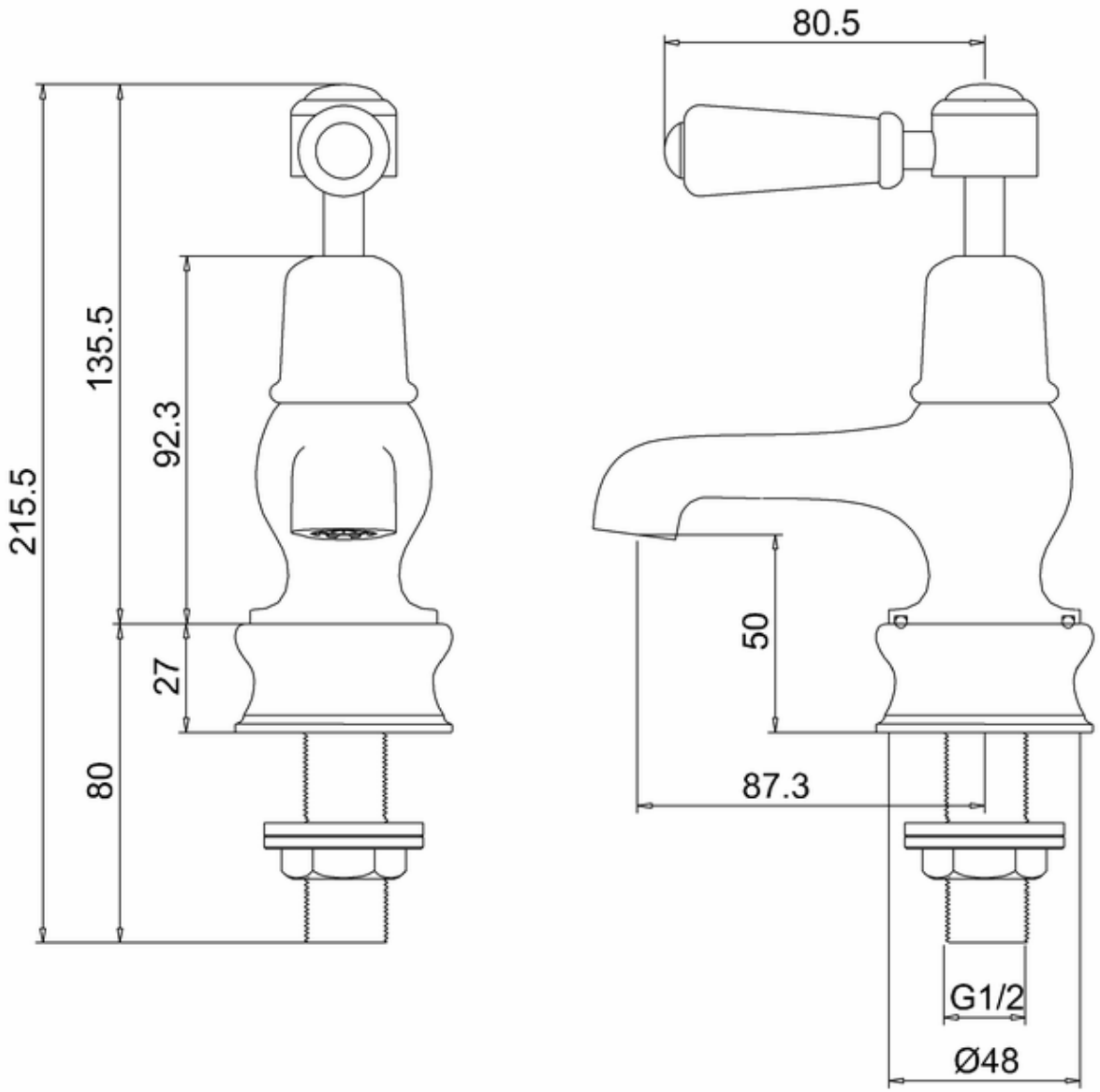
80.5
215.5
135.5
92.3
27
80
50
87.3
G1/2
Ø48