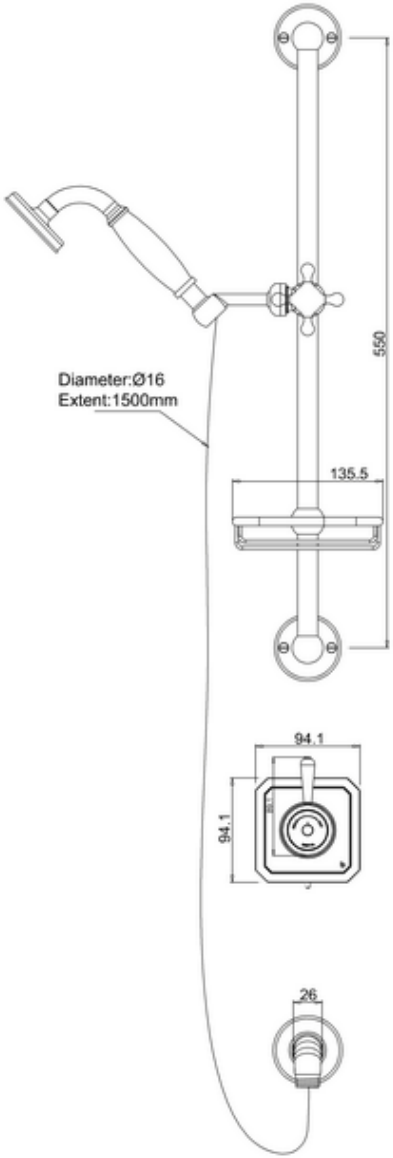
Diameter:Ø16
Extent:1500mm
550
135.5
94.1
94.1
26

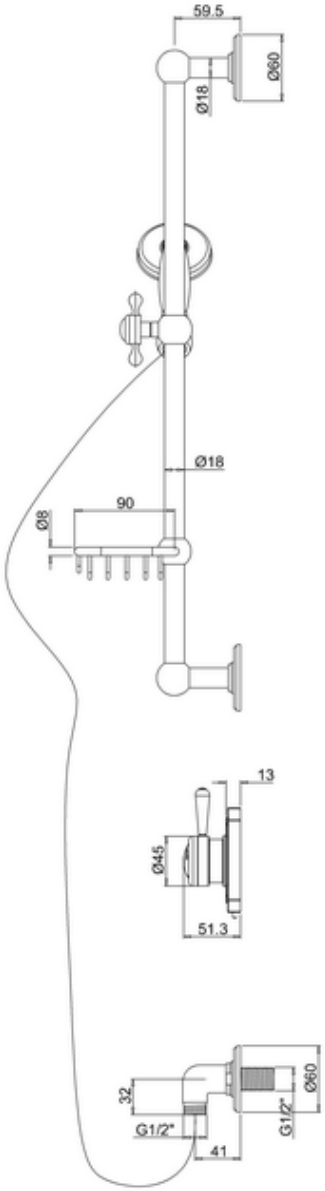
59.5
Ø60
Ø18
Ø18
90
Ø8
13
Ø45
51.3
32
G1/2"
41
G1/2"
Ø60