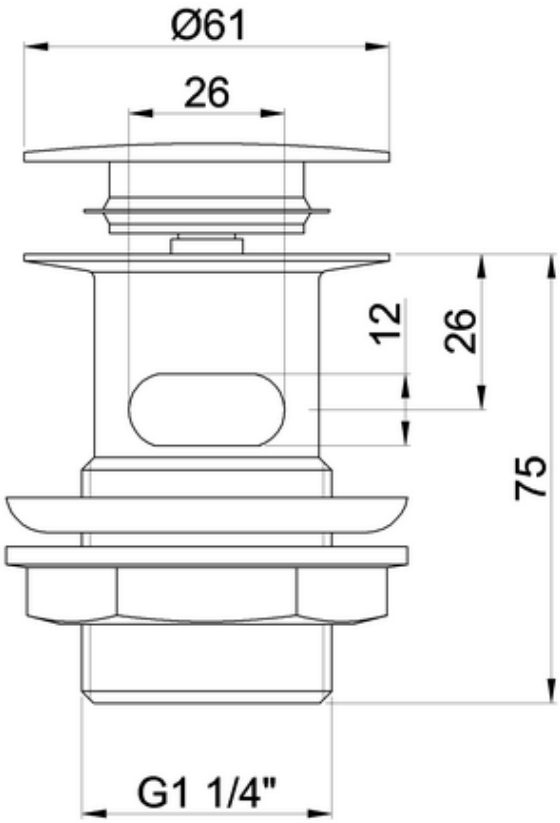
Ø61
26
12
26
75
G1 1/4"