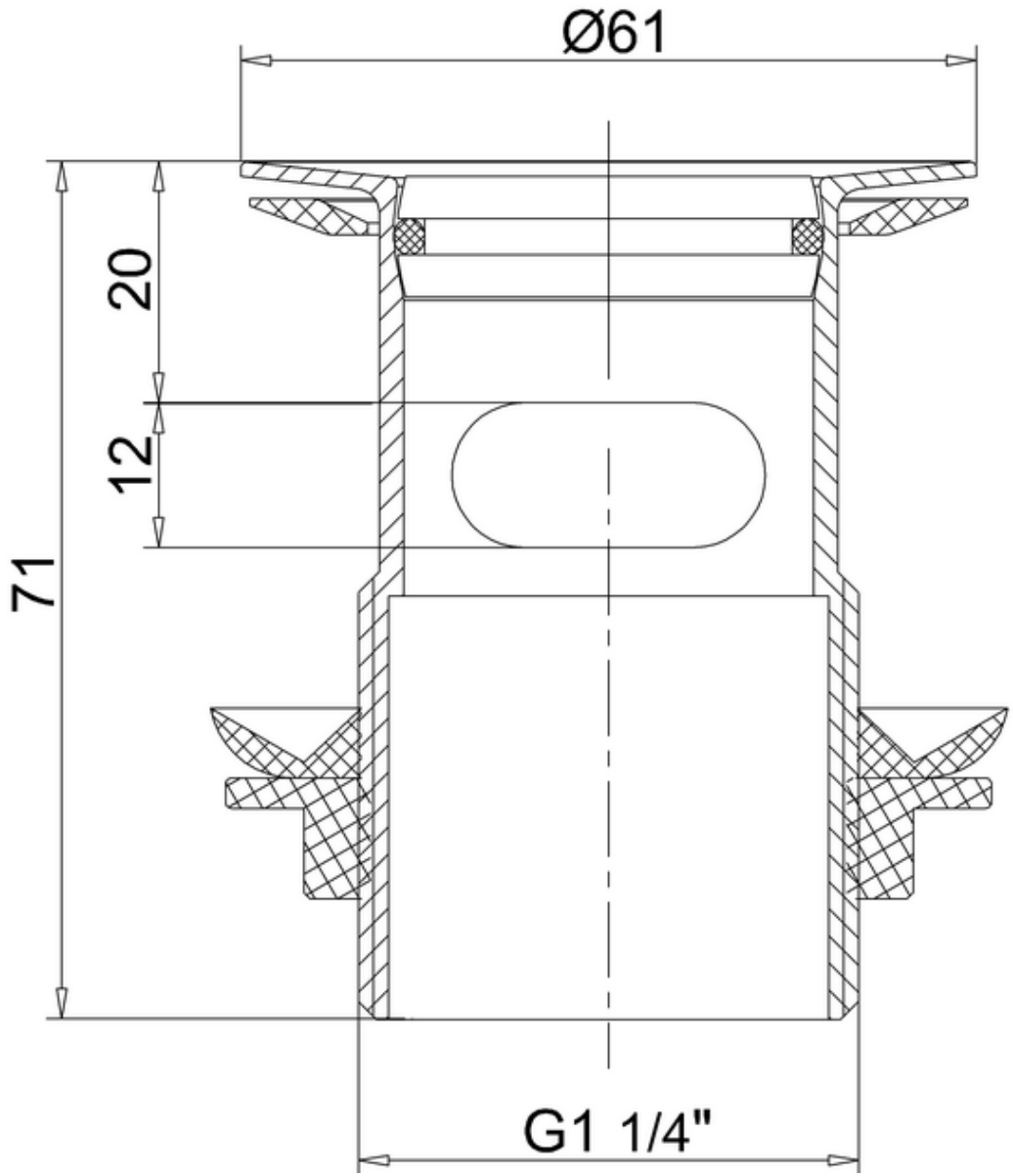
Ø61
20
12
71
G1 1/4"