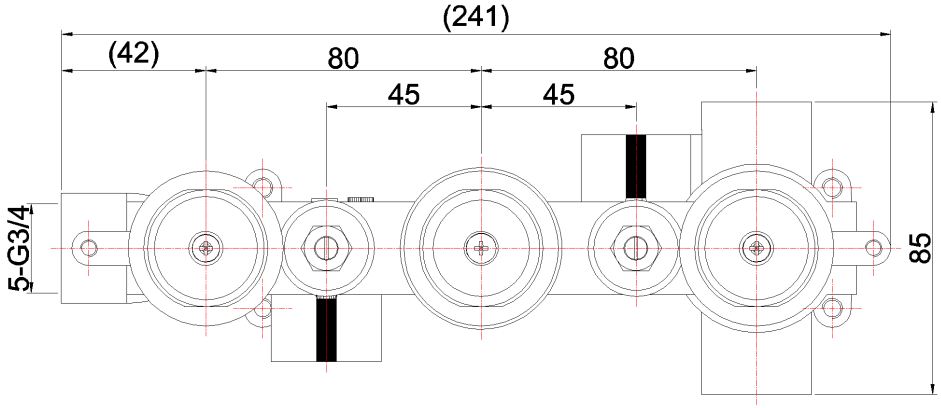
(241)
(42)
80
80
45
45
5-G3/4
85

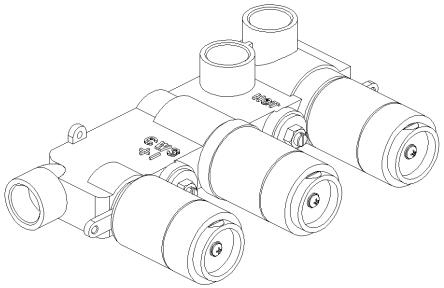

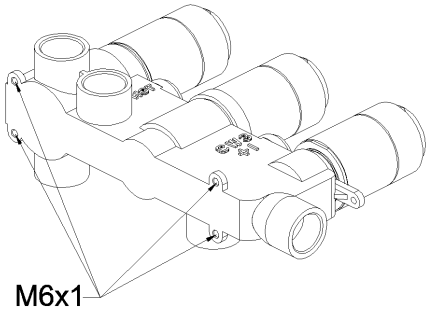
M6x1

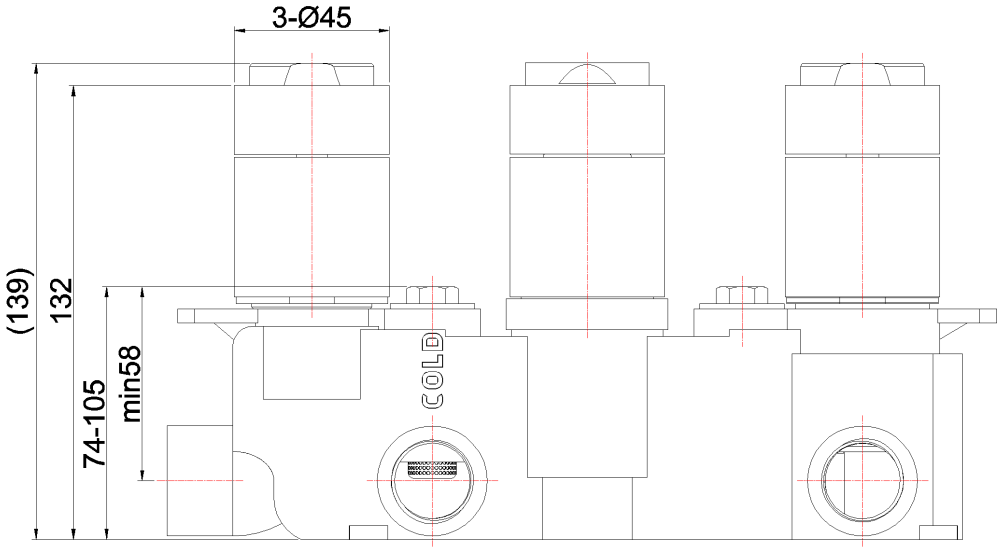
3-Ø45
(139)
132
74-105
min58
COLD