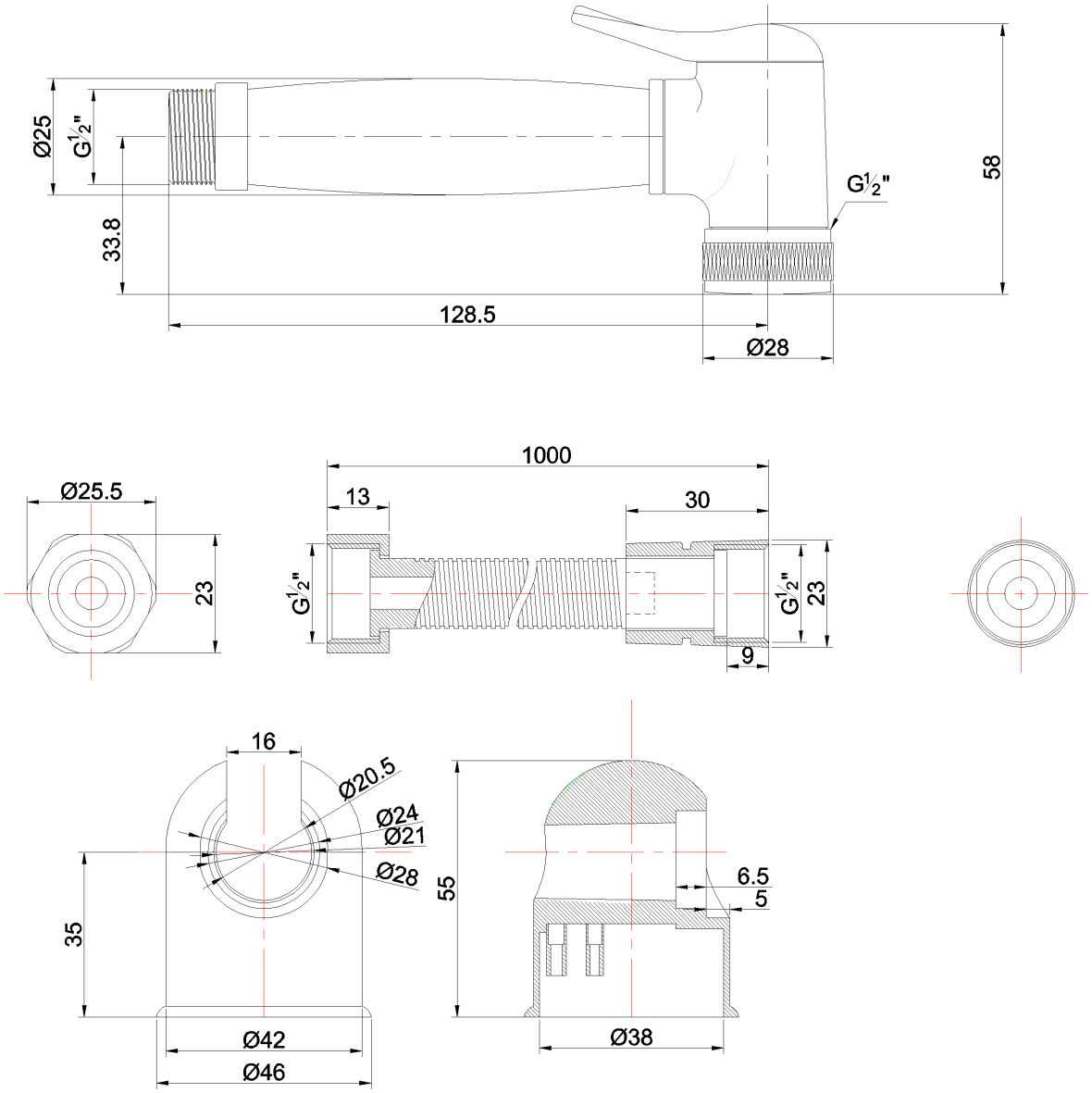


BATHROOMBRANDS®