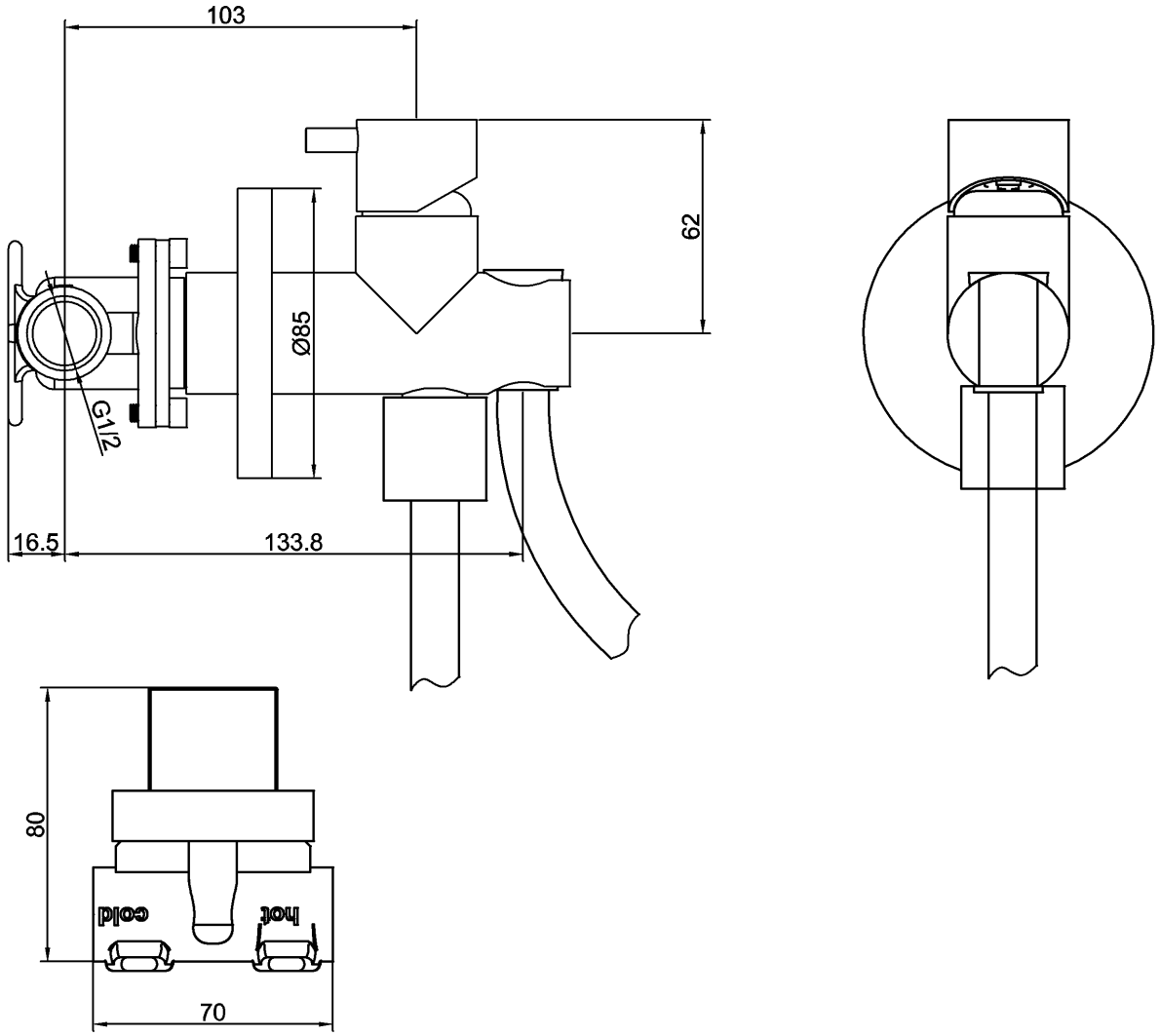
103
62
Ø85
G1/2
16.5
133.8
80
cold
hot
70