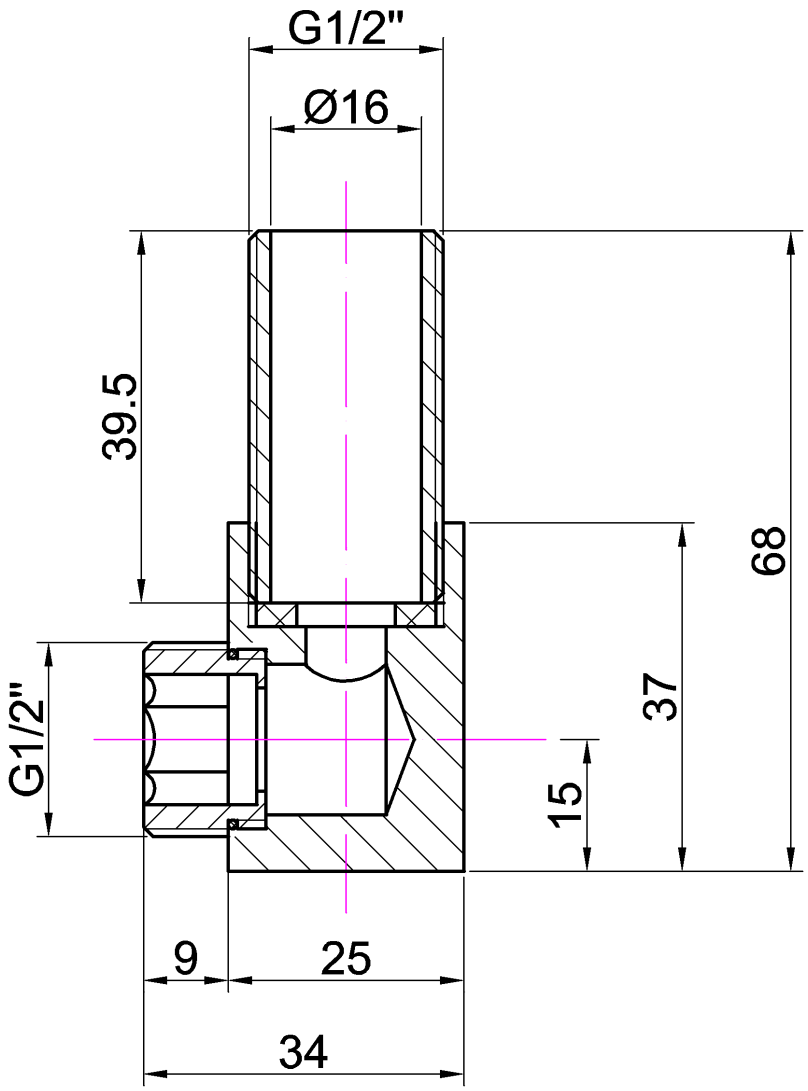


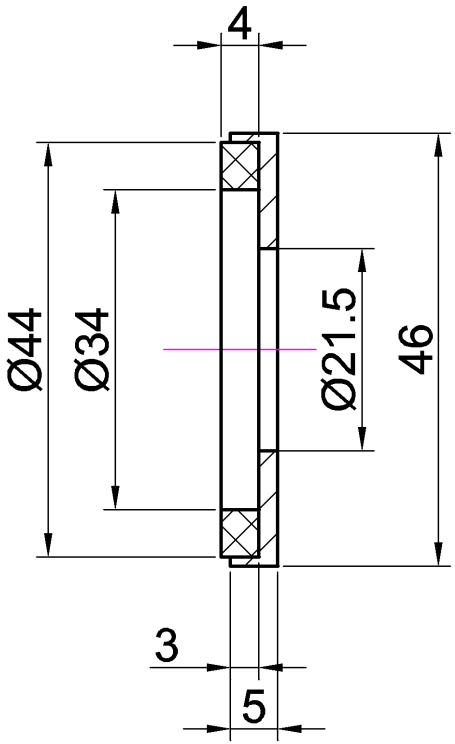


BATHROOMBRANDS®