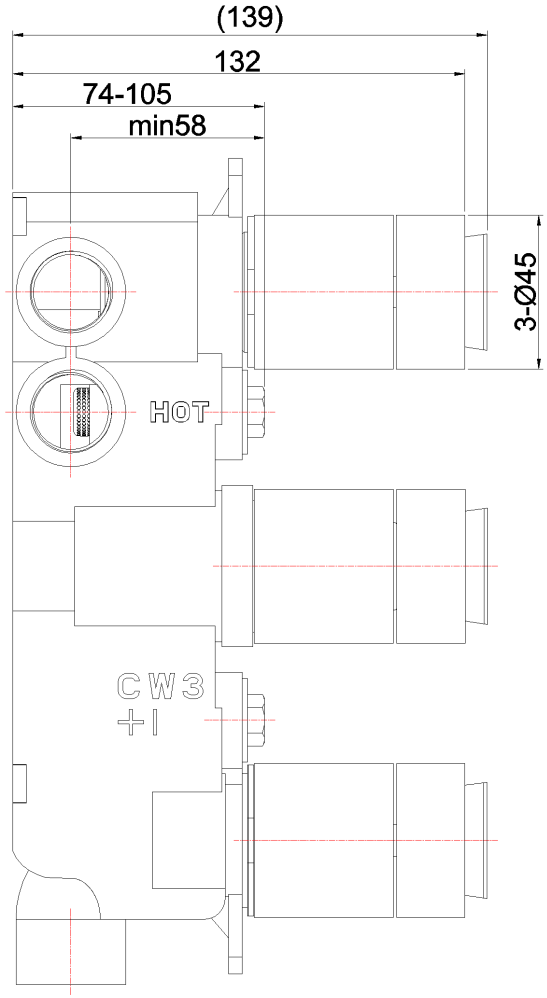
(139)
132
74-105
min58
3-Ø45
HOT
CW3
+I

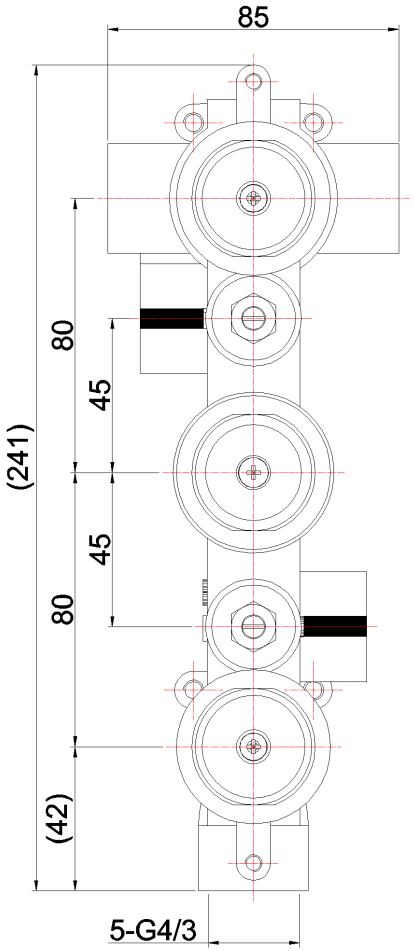
85
(241)
80
45
45
80
(42)
5-G4/3

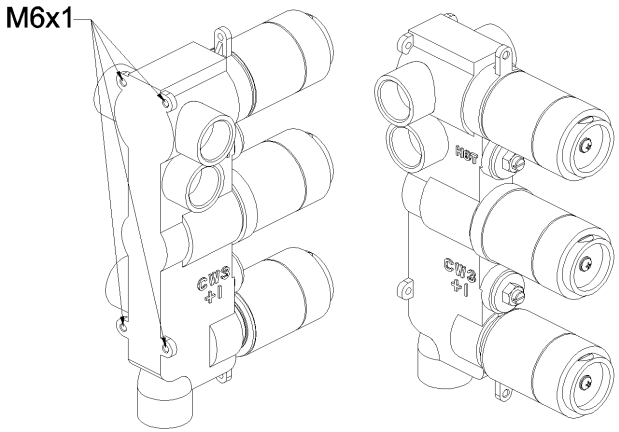
M6x1
CW3
+I
HOT
CW3
+I